Coupling Power & Storage (GCEP)

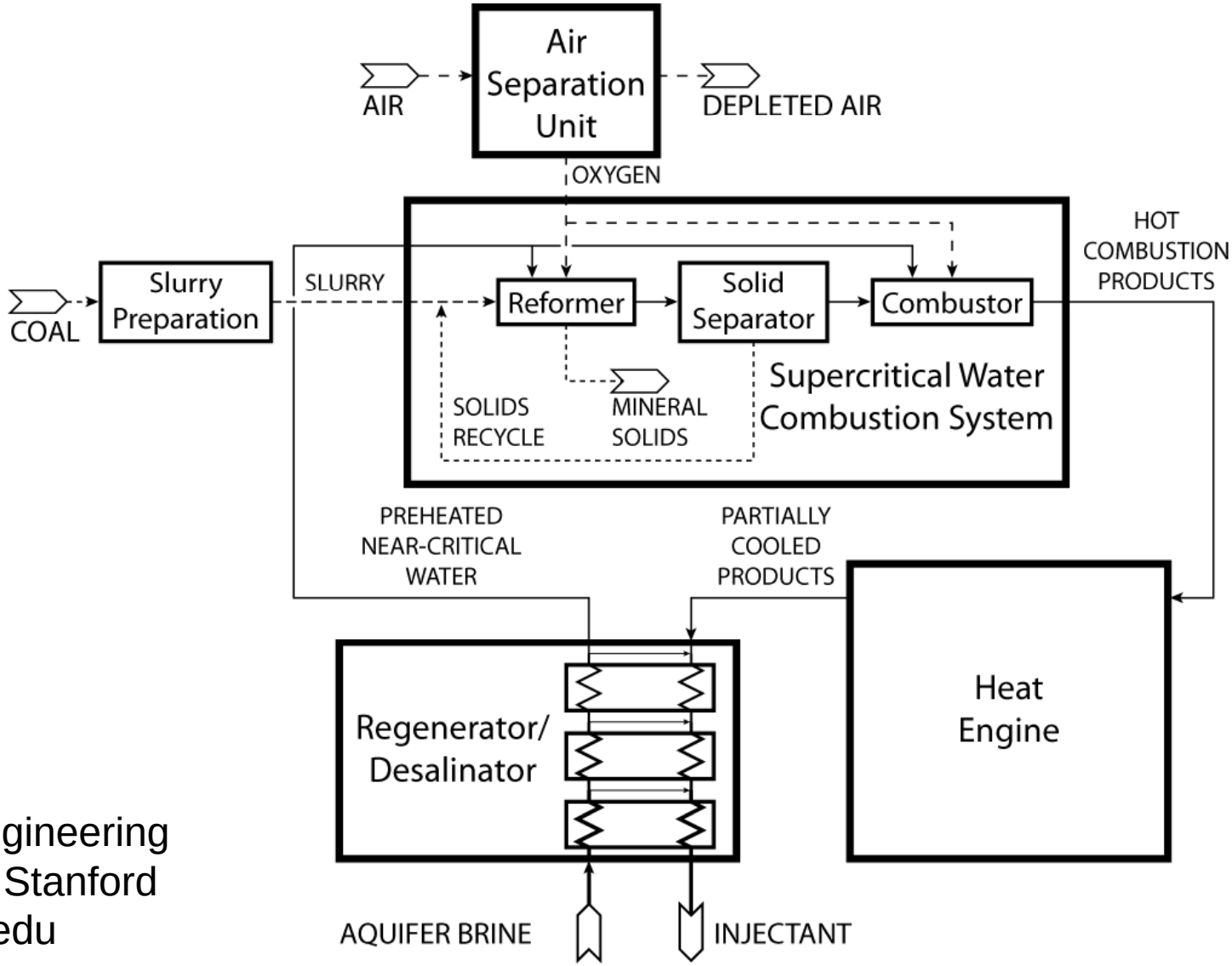

Chris Edwards
Mechanical Engineering Department, Stanford
cfe@stanford.edu

Thermodynamic Systems Analysis

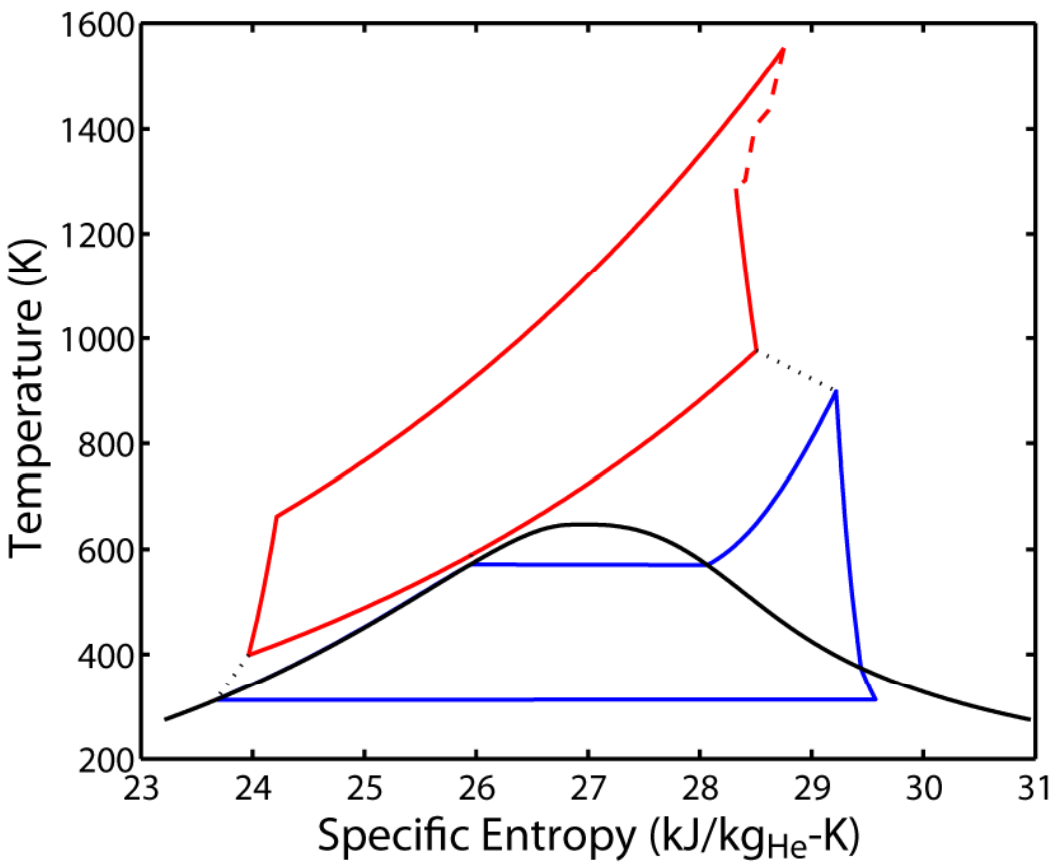

Combustor Outlet T=1600 K
Condenser T=38°C

Component	Power (MW)
Brayton Cycle	
Compressor	-388.4
Turbine	659.9
Net	271.5
Rankine Cycle	
Condensate Pump	-0.026
Feed Pump	-2.27
Turbine	331.6
Net	329.3
ASU	-73.2
Water Pumps	-27.5
Overall Plant	500.0
Heat Rate (LHV basis)	1188.4
Overall Efficiency	42.1%
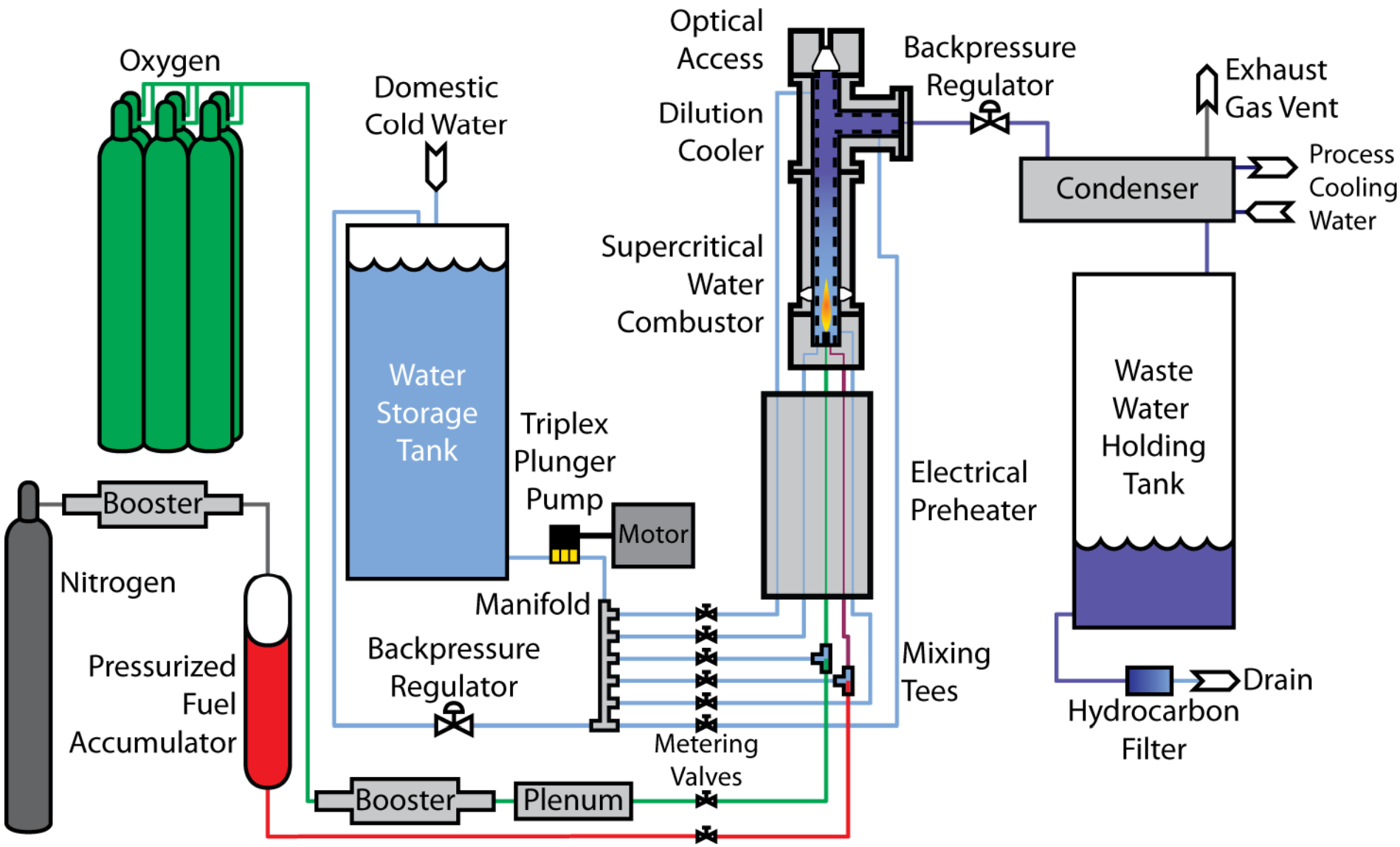
Laboratory System (50 kW)