Imaging breakout
(chair: Shapiro)

Agenda

- Overview of nanosurveyor (scattering & imaging)
- Short talks
- Discussion

Imaging breakout presentations

- Francesco Stellato (CFEL), Single particle imaging by cryo-ptychography
- Pupa Gilbert, (UW-Madison) Crystallizatioon mechanisms in biominerals
- James Rogers (UCSB), Multidimensional morphological characterization across multiple length scales

Overview of nanosurveyor

S. Marchesini

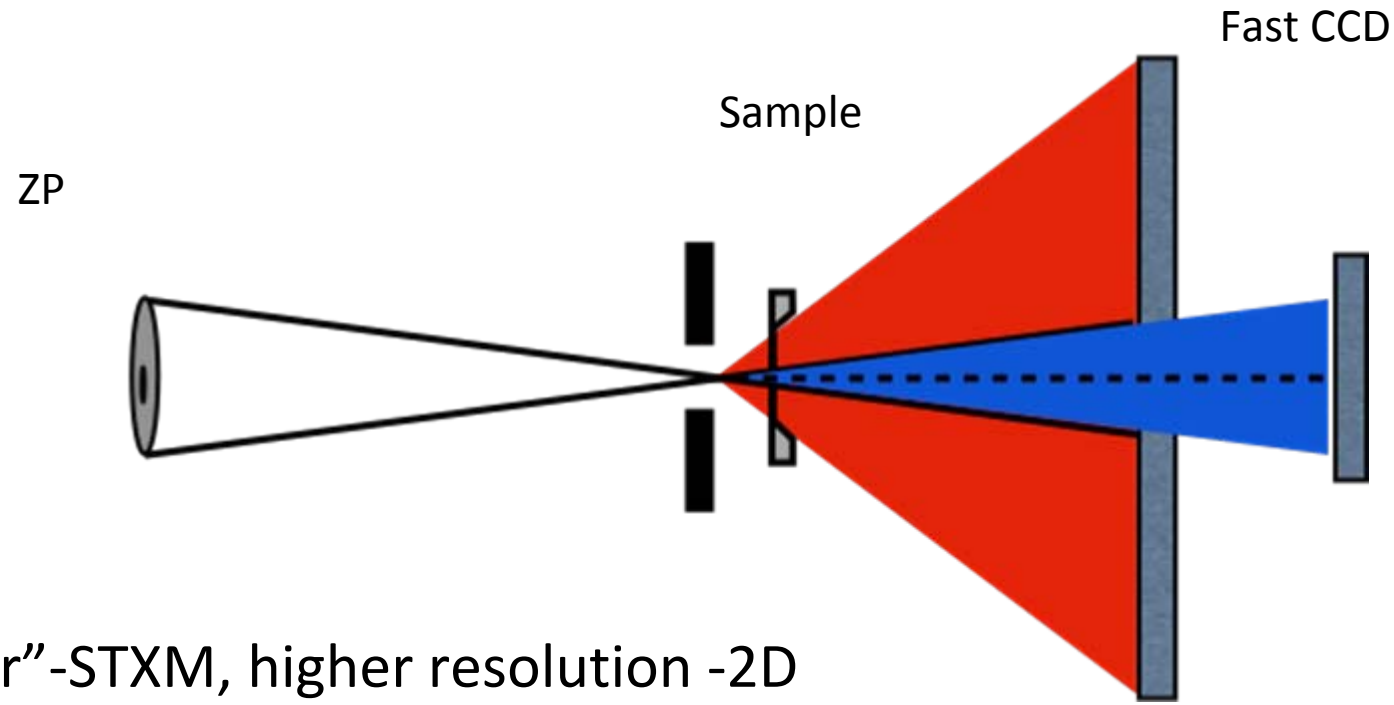

- "Super"-STXM, higher resolution -2D
- Local area (resonant) scattering
- Tomography
- All of the above

Nanosurveyor R&D

R Celestre, D Kilcoyne, S Marchesini, Andre Schirotzek and Tony Warwick

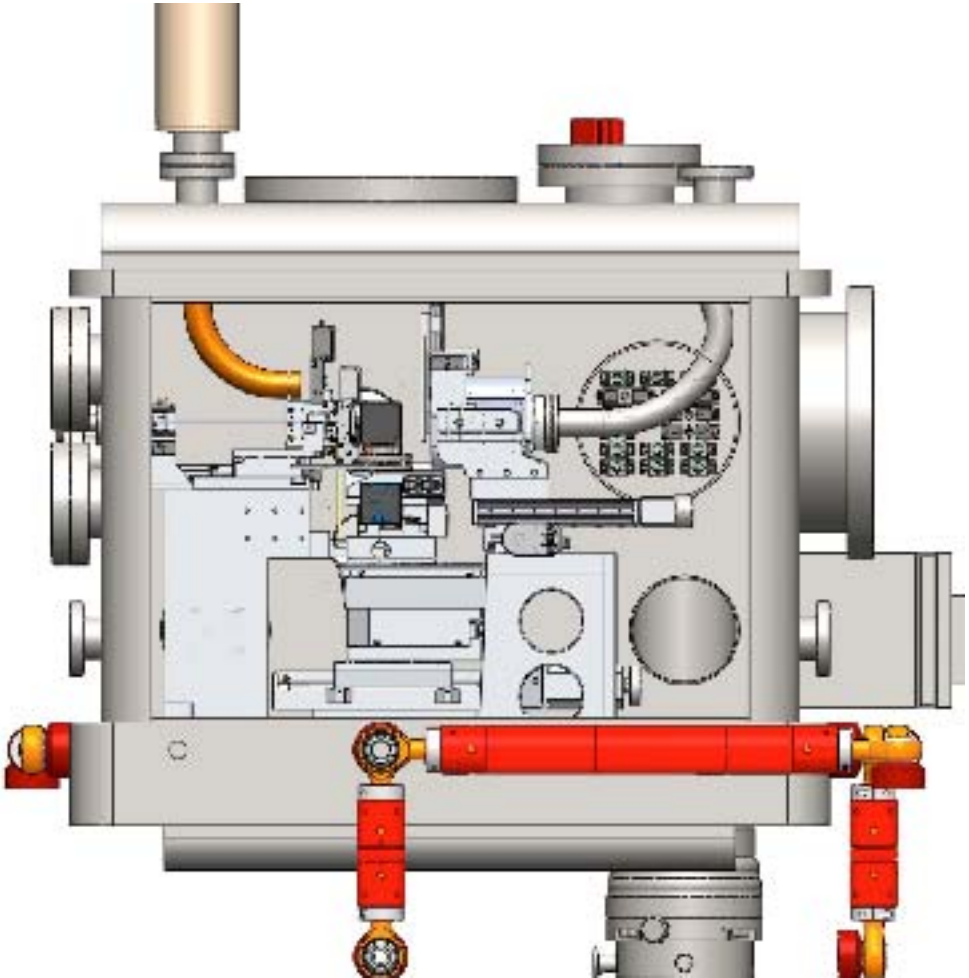

cryo- ptycho-tomography
initial deployment at beamline 9.0.1.

The goal is to push the spatial resolution beyond 10nm.

The deep focus allows tomography cryogenic sample to follow the initial deployment.

Ultimately, this instrument will move to COSMIC at the new beamline 7.0.1.

Detectors roadmap

Inside view of chamber

Interferometer beams

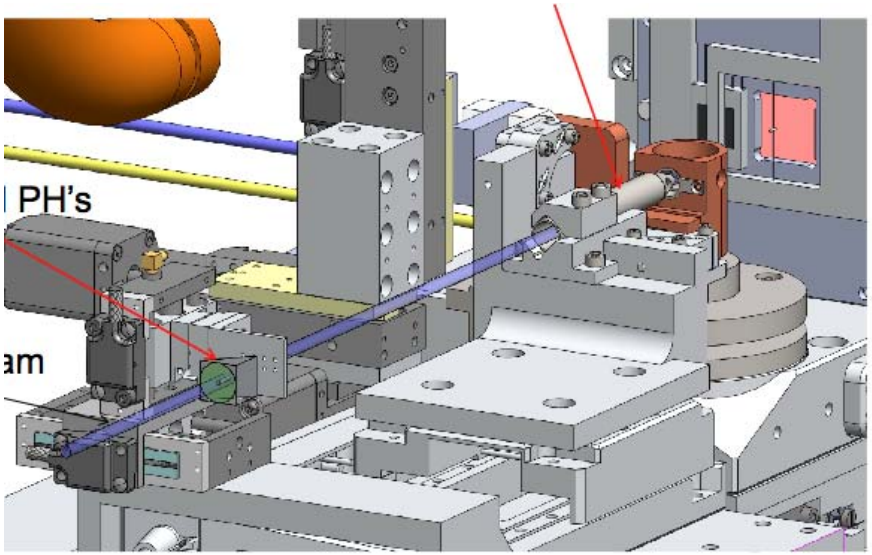

Cryogenic temperature

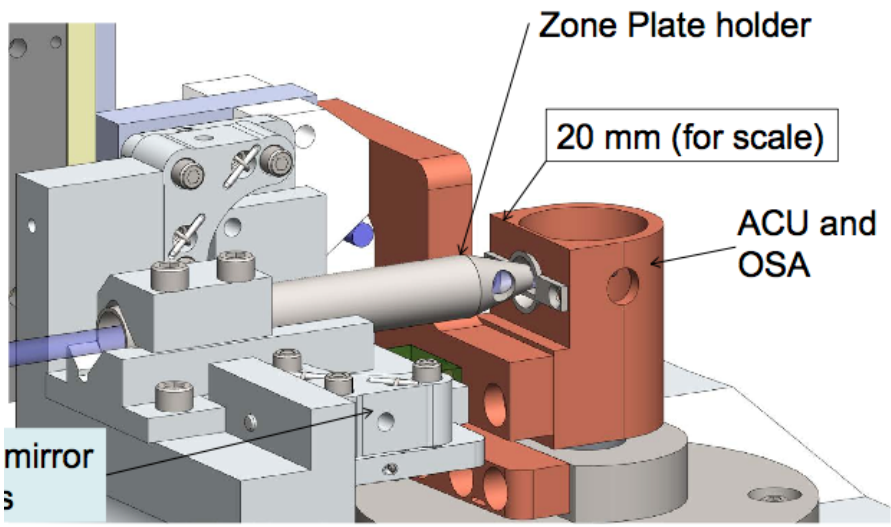

Imaging breakout discussion (chair: Shapiro)

priorities

- Super-STXM, higher resolution, large area
- Local area (resonant) scattering
- Tomography
- Energy range (250-2000, 3000?), resolving power (2500)
- Samples: magnetic systems, batteries, polymers, biofilms, cells, cement (in situ control, in operando?)
- Data: online analysis (CCD to image), storage, user software
- Sample throughput: how many samples, in what time period

Sample environment (Temp, wet cell, fields)

First experiments

Attendee Input!

Areas of scientific impact
Frozen hydrated viruses
Crystallization in biominerals (too thick so far for STXM, diffraction?)
Defect structures in liquid crystals
Heterojunction solar cell operation/morphology
In-situ nucleation (time resolution?)

Experimental capabilities
Full tomography on capillaries, Stereography or Laminography for flat samples?
Grazing incidence?

300 nm probe (TBD)Relevant scattering volumes (needed probe size)?

Energy scans, image, step energy, or point/fly-scan? Maximum energy (3 keV)?

Eye to NGLS: pump-probe (local diffraction), time resolution?
Fast CCD, low noise

Polarizations

Identify 3D ROI by tomography followed by hi-res spectroscopy (by 2D spectro-ptychography)

Sample capabilities
Temperature control: cryo (N2 or He), heating, Wet chemistry, flow/mixing cell?, e/m fields, IV measurements?
Cryo-transfer. Automated/many samples?

Day 1 experiments
Polymers, organic photovoltaic, 2D, 10nm